HPC-210-14000-15-HSK

HIGH PERFORMANCE CUTTING SPINDLE

HPC motorspindles are specifically designed for a wide variety of operations. From powerful roughing resulting in large chip removal rates to low vibration during finishing, this spindle has been optimized to achieve its impressive performance.
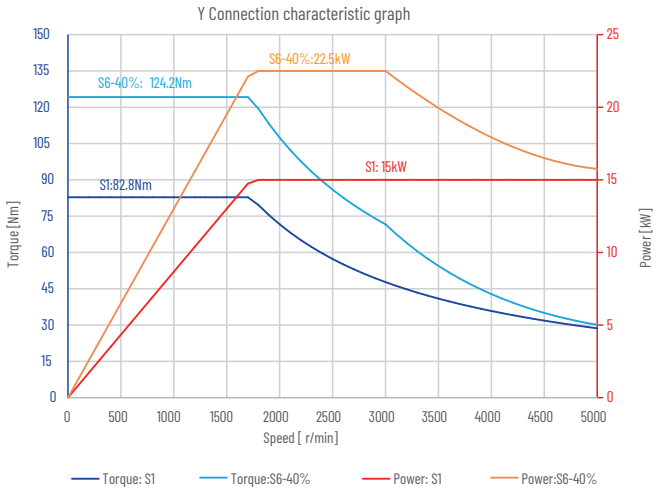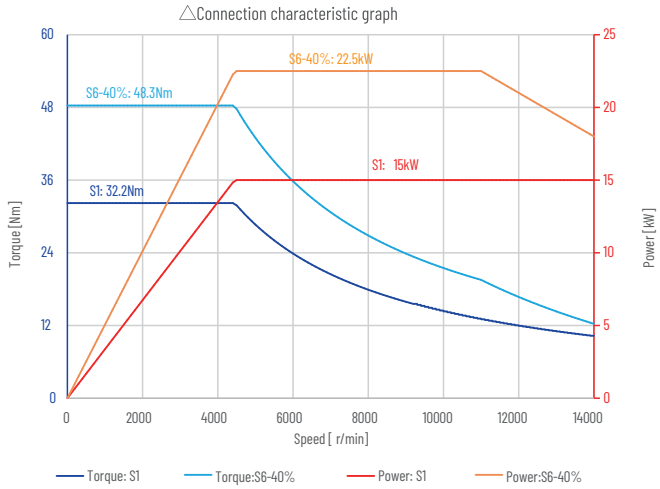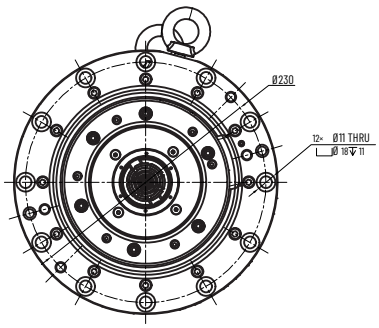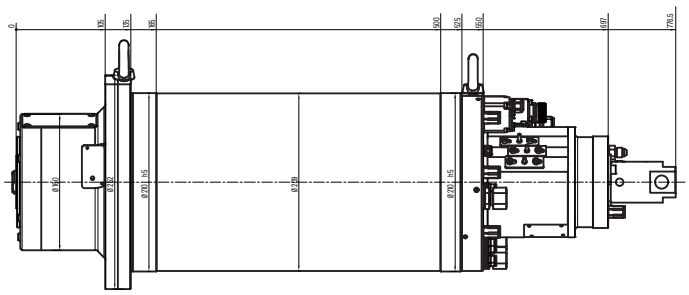
DIAMETER	Ø210mm
LENGTH	776.5mm
TOOL INTERFACE	HSK-A63
MAX. SPEED	Grease:14,000rpm
MOTOR TECHNOLOGY	Asynchronous motor
POWER S1-100%	15kW
POWER S6-40%(2 MIN)	21kW
TORQUE S1-100%	80Nm
TORQUE S6-40%(2 MIN)	112Nm
SPINDLE COOLING	Water
COOLANT THROUGH SHAFT	Water / Oil mist
ENCODER	Sin/cos, 1 Vpp
THERMISTOR IN COIL	KTY84-130
THERMISTOR FOR BEARINGS	PT100
VIBRATION SENSOR	Optional
SPINDLE GROWTH SYSTEM	Optional
TURNING	Non-supported
WEIGHT	134kg