LS SERIES

IRON CORE LINEAR MOTOR

Main features:

1. With iron core
2. Low inlay design
3. Compactness
4. High thrust and high rigidity
5. Optional hall module

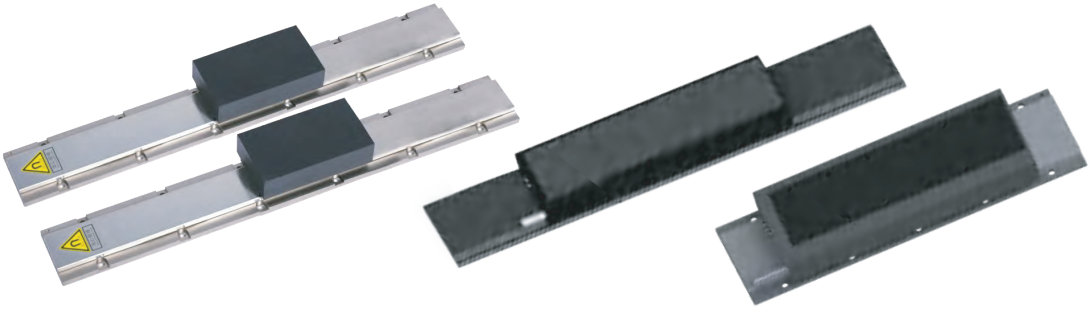

THRUST MAP OF WATER-COOLED FLAT PANEL LINEAR MOTOR SERIES

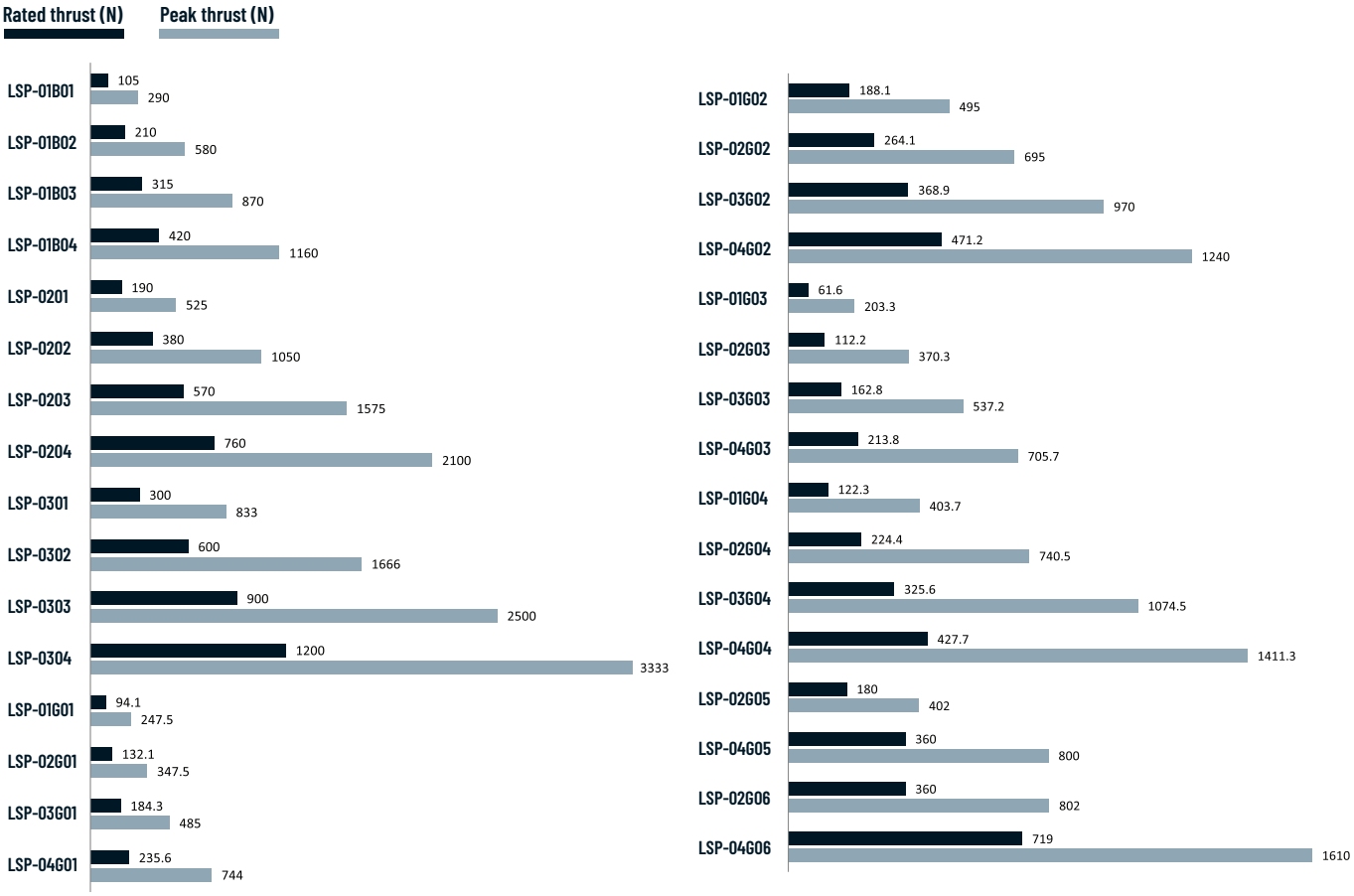

NAMING RULE:

LSP-0101W

PRODUCT CATEGORY
L: Linear Motor

MOTOR DESIGN
S: Single side plate (iron core)
D: Double side plate (coreless)
M: Mavilor design

COMPONENT CODE
P: Primary (rotor)
S: Secondary (stator)

WIDTH CODE
01 | 02 | 03 | ...

LENGTH CODE
01 | 02 | 03 | ...

COOLING METHOD
W: Water
O: Oil
Omitted: No specific cooling

LS-01

IRON CORE LINEAR MOTOR

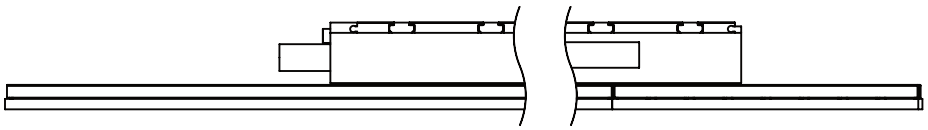

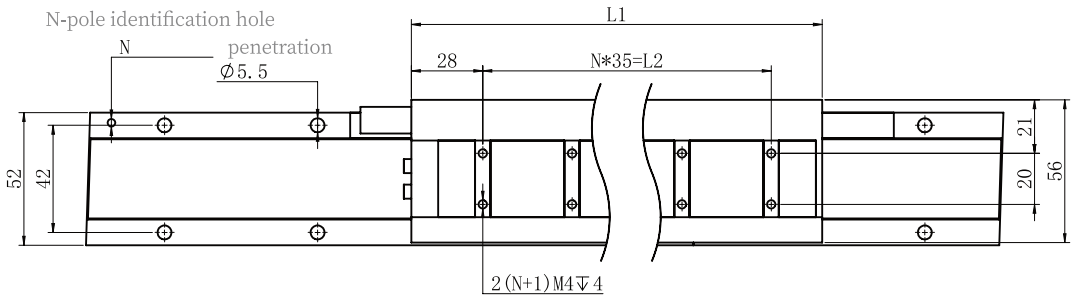

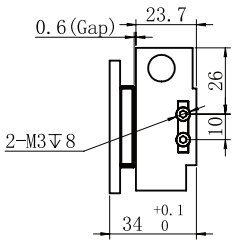

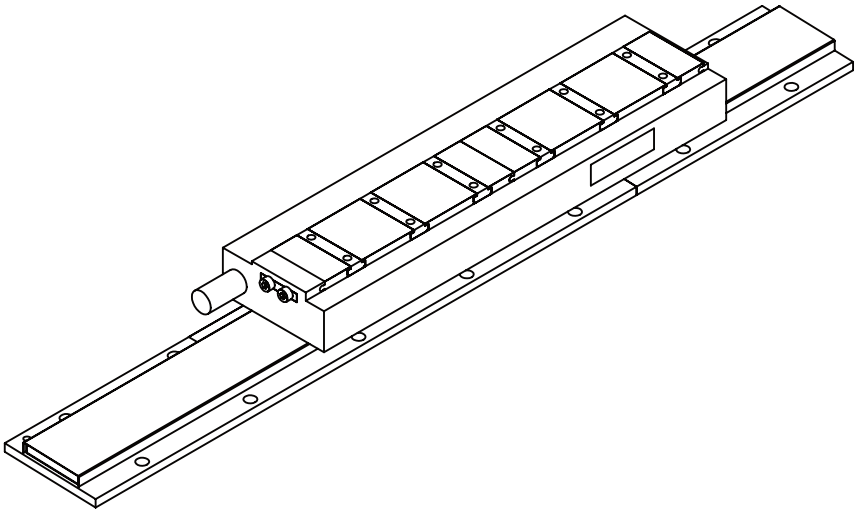

Model	LSP-01B01	LSP-01B02	LSP-01B03	LSP-01B04
L1	118	223	328	433
L2	70	175	280	385
N	2	5	8	11

LS-01

IRON CORE LINEAR MOTOR

Primary model	LSP-01B01	LSP-01B02	LSP-01B03	LSP-01B04
(N) Continuous thrust	105	210	315	420
(N) Peak thrust	290	580	870	1160
(N/√W) Motor constant	11.5	16.3	20	23
(W) Peak Continuous Loss Power	83	166	249	332
(A) Continuous Current	2.2	4.4	6.6	8.8
(A) Peak Current	6.5	13	19.5	26
(N/A) thrust Constant	47.7	47.7	47.7	47.7
(Vs/m) Back EMF constant	27.5	27.5	27.5	27.5
Line resistance 20 °C (Ω)	8.8	4.4	2.93	2.2
(mH) Line inductance	40	20	13.3	10
(°C) Peaktemperature	120	120	120	120
(mm) Pole width (N-N)	30	30	30	30
(N) Attraction thrust	480	960	1440	1920
(Kg) Mass of primary	0.7	1.4	2.1	2.8
(M) Standard cable length	0.8	0.8	0.8	0.8

Stainless steel sheet metal			
Secondary model	LSSA-01B01-S	LSP-01B02-S	LSP-01B03-S
(mm) Specifications	120	180	300

LS-02

IRON CORE LINEAR MOTOR

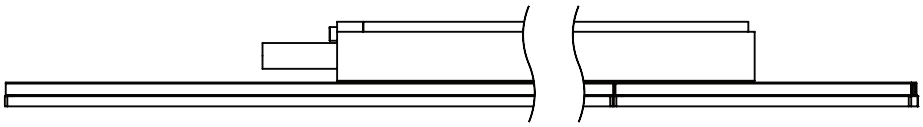

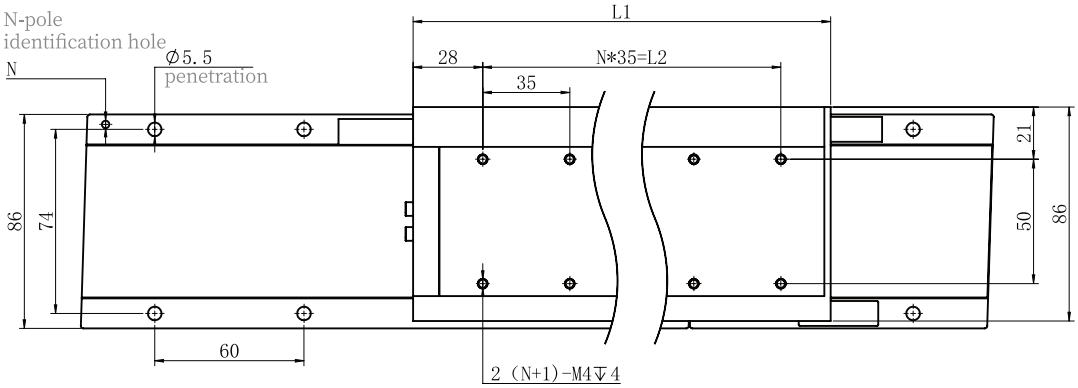

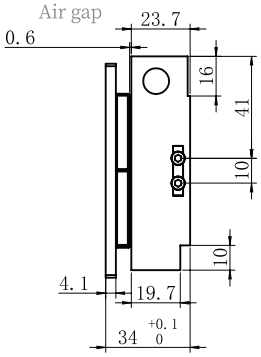

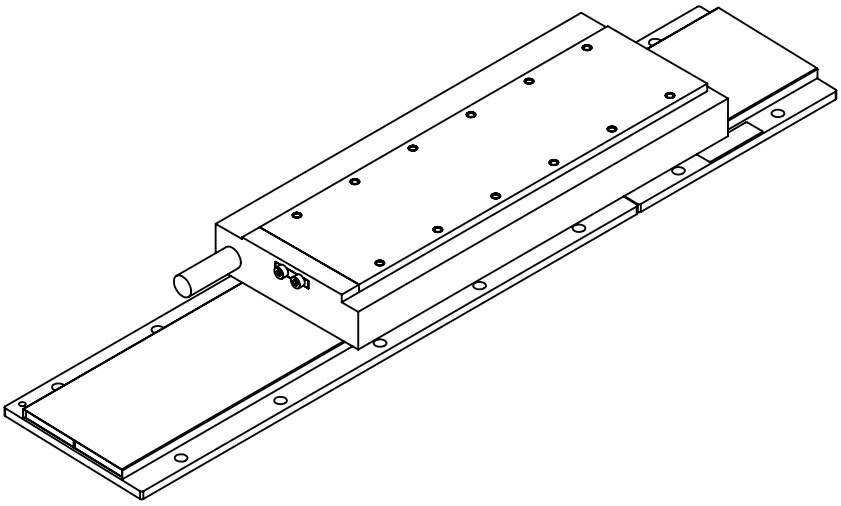

Model	LSP-0201	LSP-0202	LSP-0203	LSP-0204
L1	118	223	328	433
L2	70	175	280	385
N	2	5	8	11

LS-02

IRON CORE LINEAR MOTOR

Primary model	LSP-0201	LSP-0202	LSP-0203	LSP-0204
(N) Continuous thrust	190	380	570	760
(N) Peak thrust	525	1050	1575	2100
(N/√W) Motor constant	18.4	26.1	32	36.9
(W) Peak Continuous Loss Power	106	212	318	424
(A) Continuous Current	2	4	6	8
(A) Peak Current	6	12	18	24
(N/A) thrust Constant	95	95	95	95
(Vs/m) Back EMF constant	54.8	54.8	54.8	54.8
Line resistance 20 °C (Ω)	13.6	6.8	4.53	3.4
(mH) Line inductance	70	35	23.3	17.5
(°C) Peaktemperature	120	120	120	120
(mm) Pole width (N-N)	30	30	30	30
(N) Attraction thrust	1250	2500	3750	5000
(Kg) Mass of primary	1.1	2.2	3.3	4.4
(M) Standard cable length	0.8	0.8	0.8	0.8

Stainless steel sheet metal			
Secondary model	LSP-0201-S	LSP-0203-S	LSP-0207-S
(mm) Specifications	120	180	300

LS-03

IRON CORE LINEAR MOTOR

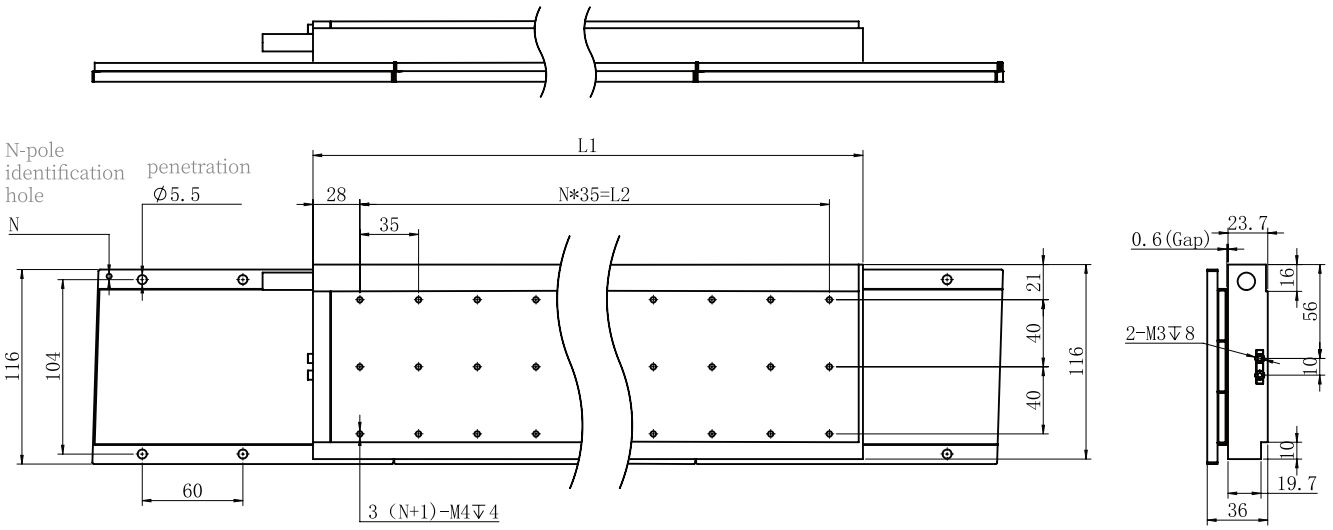

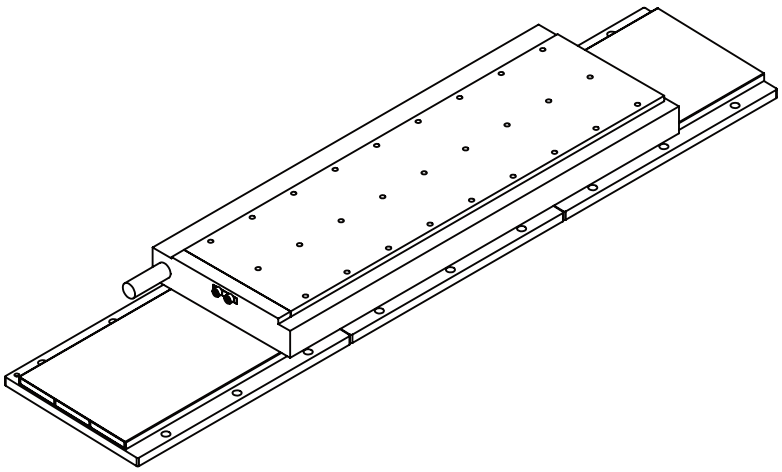

Model	LSP-0301	LSP-0302	LSP-0303	LSP-0304
L1	118	223	328	433
L2	70	175	280	385
N	2	5	8	11

LS-03

IRON CORE LINEAR MOTOR

Primary model	LSP-0301	LSP-0302	LSP-0303	LSP-0304
(N) Continuous thrust	300	600	900	1200
(N) Peak thrust	833	1666	2500	3333
(N/√W) Motor constant	24.5	34.7	42.5	49
(W) Peak Continuous Loss Power	150	300	449	599
(A) Continuous Current	2	4	6	8
(A) Peak Current	6	12	18	24
(N/A) thrust Constant	150	150	150	150
(Vs/m) Back EMF constant	86.6	86.6	86.6	86.6
Line resistance 20 °C (Ω)	19.2	9.6	6.4	4.8
(mH) Line inductance	105	52.5	35	26.3
(°C) Peaktemperature	120	120	120	120
(mm) Pole width (N-N)	30	30	30	30
(N) Attraction thrust	1667	3333	5000	6667
(Kg) Mass of primary	1.9	3.8	5.7	7.6
(M) Standard cable length	0.8	0.8	0.8	0.8

Stainless steel sheet metal			
Secondary model	LSP-0301-S	LSP-0303-S	LSP-0307-S
(mm) Specifications	120	180	300

LS-01G01

IRON CORE LINEAR MOTOR

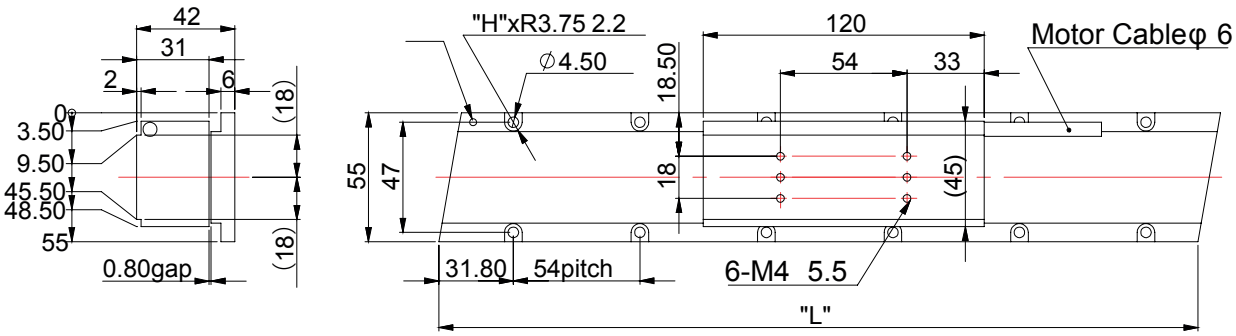

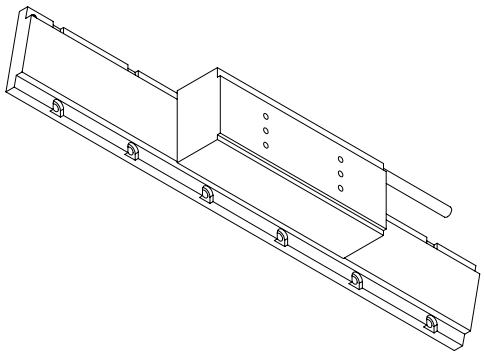

LSSA-01G		
Secondary model	L	**H**
LSSA-01G01	108	4
LSSA-01G02	216	8
LSSA-01G03	324	12
LSSA-01G04	432	16

LSP-01G01		
parameter	unit	LSP-01G01
Sustained thrust	N	94.1
Peak thrust	N	247.5
Motor constant	N/vW	15.2
Continuous power	W	37
Polar pair distance	mm	36
Continuous current	Arms	1.9
peak current	Arms	5
force constant	N/Arms	49.5
Back EMF constant	Vs/m	28.2
Resistance @25℃	Ohms	7.5
inductance	mH	30
Electrical time constant	ms	4
Maximum coil temperature	℃	120
Primary quality	kg	1
Primary length	mm	120
Secondary mass (per meter)	kg	3.5
Magnetic attraction	kN	0.8
Secondary model		LSSA-01G
Secondary optional length	mm	108、216、324、432

LS-02G01

IRON CORE LINEAR MOTOR

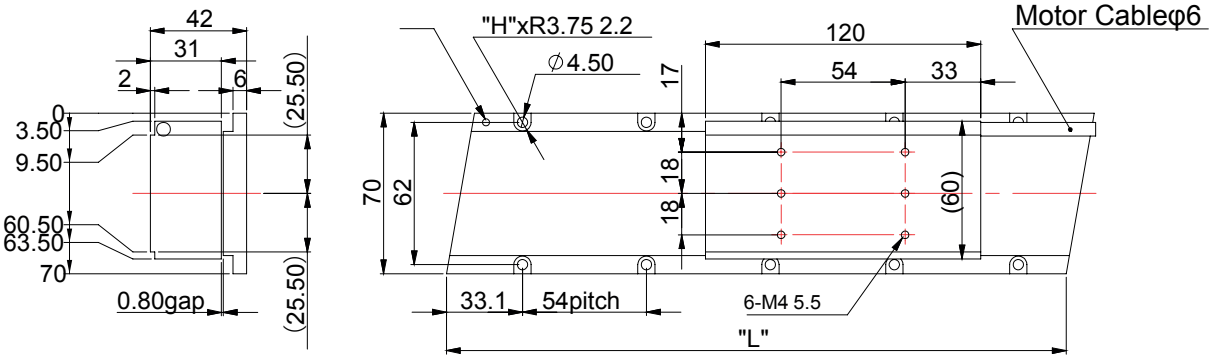

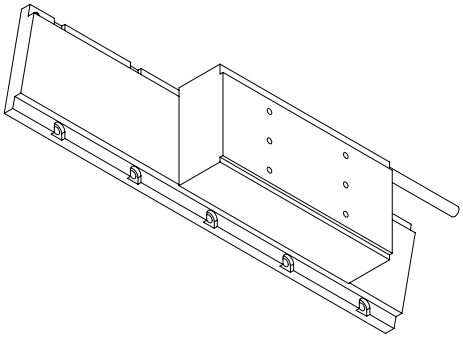

LSSA-02G		
Secondary model	L	**H**
LSSA-02G01	108	4
LSSA-02G02	216	8
LSSA-02G03	324	12
LSSA-02G04	432	16

LSP-02G01		
parameter	unit	LSP-02-G01
Sustained thrust	N	132.1
Peak thrust	N	347.5
Motor constant	N/vW	18.8
Continuous power	W	49.3
Polar pair distance	mm	36
Continuous current	Arms	1.9
peak current	Arms	5
force constant	N/Arms	69.5
Back EMF constant	Vs/m	40.1
Resistance @25℃	Ohms	10
inductance	mH	40
Electrical time constant	ms	4
Maximum coil temperature	℃	120
Primary quality	kg	1.4
Primary length	mm	120
Secondary mass (per meter)	kg	4.6
Magnetic attraction	kN	1
Secondary model		LSSA-02G
Secondary optional length	mm	108、216、324、432

LS-03G01

IRON CORE LINEAR MOTOR

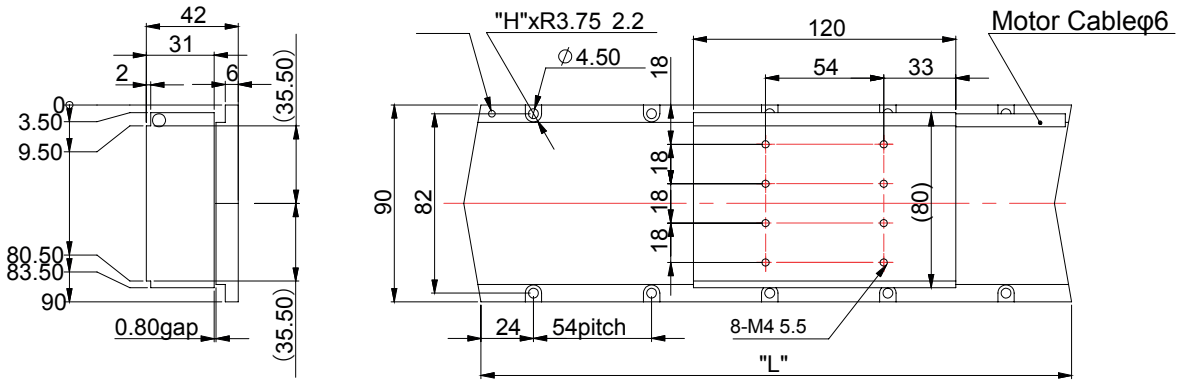

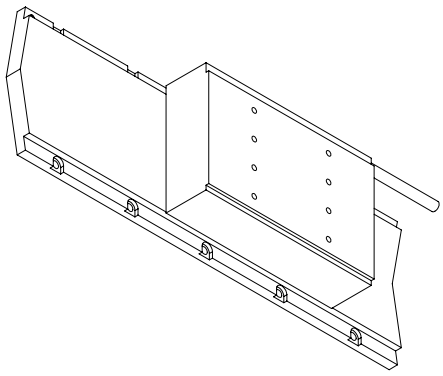

LSSA-03G		
Secondary model	L	**H**
LSSA-03G01	108	4
LSSA-03G02	216	8
LSSA-03G03	324	12
LSSA-03G04	432	16

LSP-03G01		
parameter	unit	LSP-03-G01
Sustained thrust	N	184.3
Peak thrust	N	485
Motor constant	N/vW	22.9
Continuous power	W	64.6
Polar pair distance	mm	36
Continuous current	Arms	1.9
peak current	Arms	5
force constant	N/Arms	97
Back EMF constant	Vs/m	22.8
Resistance @25℃	Ohms	13.1
inductance	mH	52
Electrical time constant	ms	4
Maximum coil temperature	℃	120
Primary quality	kg	1.9
Primary length	mm	120
Secondary mass (per meter)	kg	6.1
Magnetic attraction	kN	1.5
Secondary model		LSSA-03G
Secondary optional length	mm	108、216、324、432

LS-04G01

IRON CORE LINEAR MOTOR

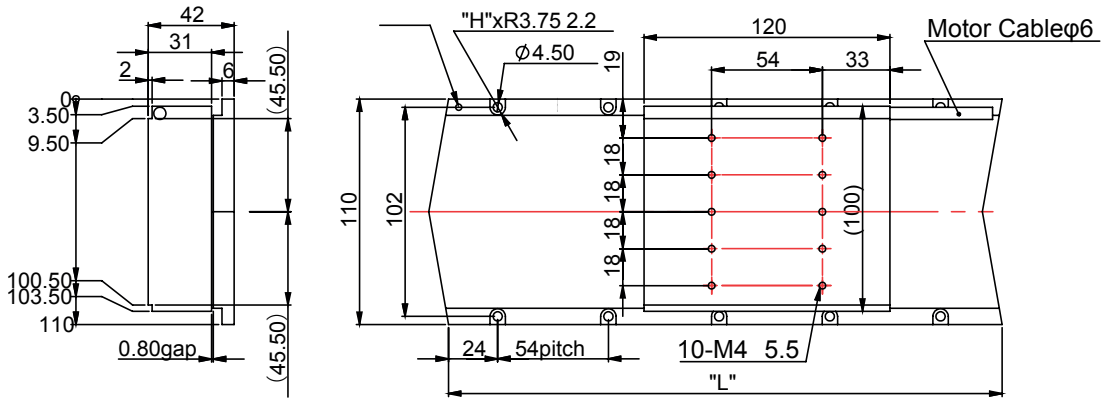

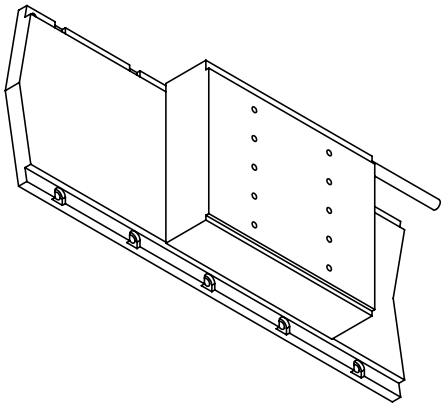

LSSA-04G		
Secondary model	L	**H**
LSSA-04G01	108	4
LSSA-04G02	216	8
LSSA-04G03	324	12
LSSA-04G04	432	16

LSP-04G01		
parameter	unit	LSP-04-G01
Sustained thrust	N	235.6
Peak thrust	N	744
Motor constant	N/vW	26.9
Continuous power	W	80.3
Polar pair distance	mm	36
Continuous current	Arms	1.9
peak current	Arms	6
force constant	N/Arms	124
Back EMF constant	Vs/m	71.6
Resistance @25℃	Ohms	16.3
inductance	mH	65
Electrical time constant	ms	4
Maximum coil temperature	℃	120
Primary quality	kg	2.4
Primary length	mm	120
Secondary mass (per meter)	kg	7.6
Magnetic attraction	kN	2
Secondary model		LSSA-04G
Secondary optional length	mm	108、216、324、432

LS-01G02

IRON CORE LINEAR MOTOR

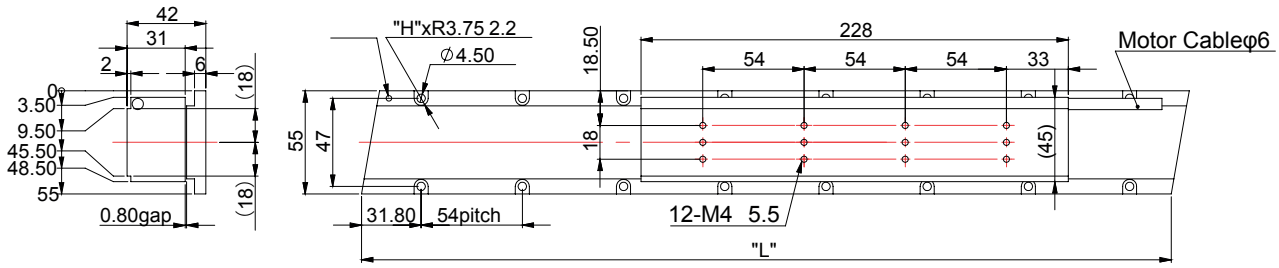

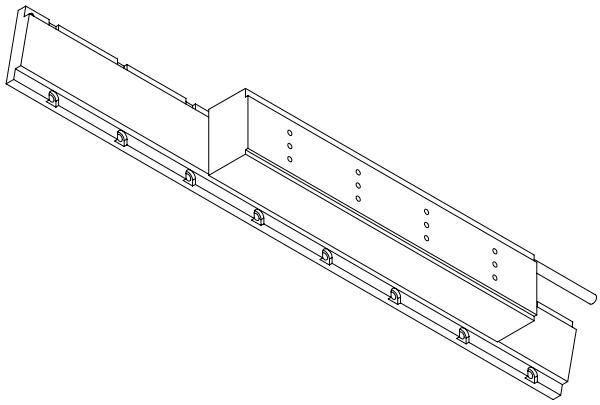

LS-01G		
Secondary model	L	**H**
LSSA-01G01	108	4
LSSA-01G02	216	8
LSSA-01G03	324	12
LSSA-01G04	432	16

LSP-01G02		
parameter	unit	LSP-01G02
Sustained thrust	N	188.1
Peak thrust	N	495
Motor constant	N/vW	21.8
Continuous power	W	74.9
Polar pair distance	mm	36
Continuous current	Arms	3.8
peak current	Arms	10
force constant	N/Arms	49.5
Back EMF constant	Vs/m	28.6
Resistance @25℃	Ohms	3.8
inductance	mH	15
Electrical time constant	ms	3.9
Maximum coil temperature	℃	120
Primary quality	kg	1.9
Primary length	mm	228
Secondary mass (per meter)	kg	3.5
Magnetic attraction	kN	1.4
Secondary model		LSSA-01G
Secondary optional length	mm	108、216、324、432

LS-02G02

IRON CORE LINEAR MOTOR

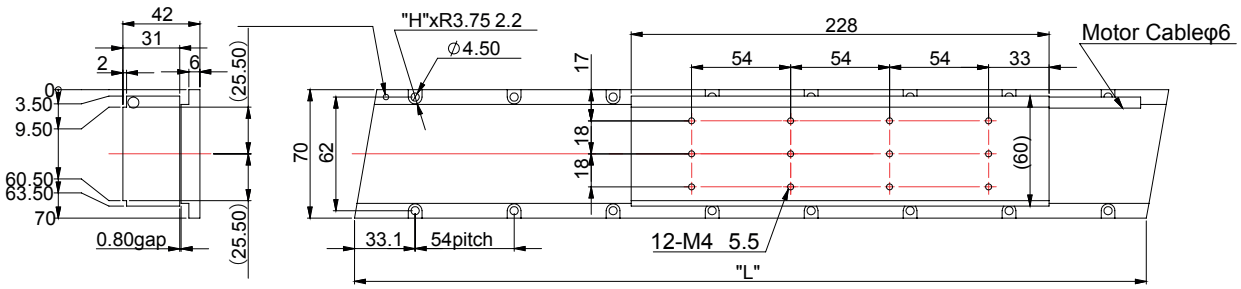

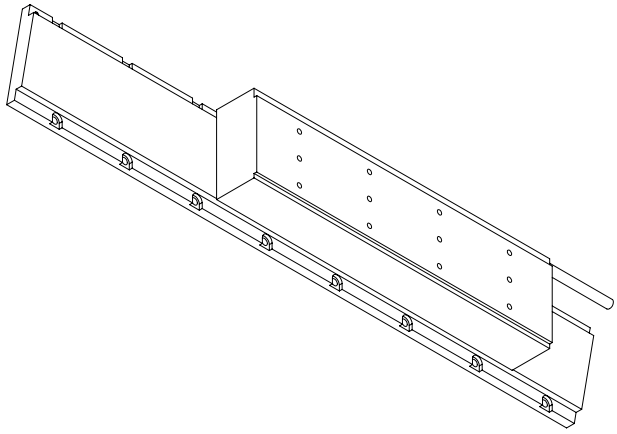

LSSA-02G		
Secondary model	L	**H**
LSSA-02G01	108	4
LSSA-02G02	216	8
LSSA-02G03	324	12
LSSA-02G04	432	16

LSP-02G02		
parameter	unit	LSP-02G02
Sustained thrust	N	264.1
Peak thrust	N	695
Motor constant	N/vW	26.6
Continuous power	W	98.6
Polar pair distance	mm	36
Continuous current	Arms	3.8
peak current	Arms	10
force constant	N/Arms	69.5
Back EMF constant	Vs/m	40.1
Resistance@25℃	Ohms	5
inductance	mH	20
Electrical time constant	ms	4
Maximum coil temperature	℃	120
Primary quality	kg	2.7
Primary length	mm	228
Secondary mass (per meter)	kg	4.6
Magnetic attraction	kN	2
Secondary model		LSSA-02G
Secondary optional length	mm	108、216、324、432

LS-03G02

IRON CORE LINEAR MOTOR

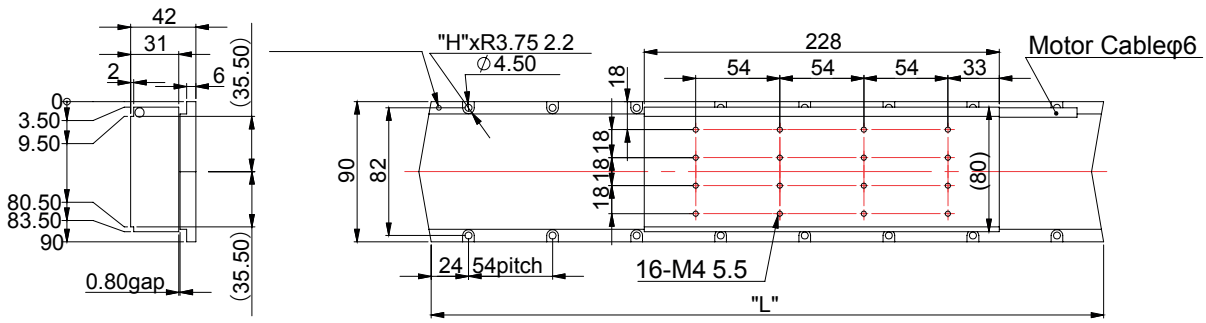

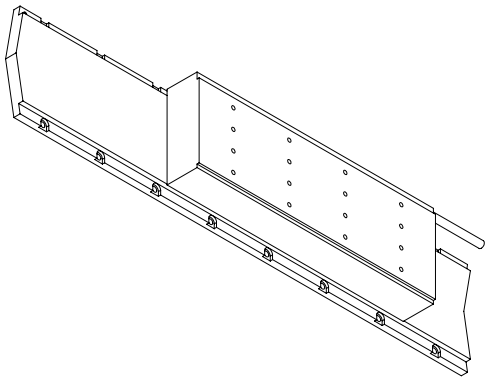

LSSA-03G		
Secondary model	L	**H**
LSSA-03G01	108	4
LSSA-03G02	216	8
LSSA-03G03	324	12
LSSA-03G04	432	16

LSP-03G02		
parameter	unit	LSP-03G02
Sustained thrust	N	368.6
Peak thrust	N	970
Motor constant	N/vW	32.3
Continuous power	W	130.1
Polar pair distance	mm	36
Continuous current	Arms	3.8
peak current	Arms	10
force constant	N/Arms	97
Back EMF constant	Vs/m	56.0
Resistance @25℃	Ohms	6.6
inductance	mH	26
Electrical time constant	ms	3.9
Maximum coil temperature	℃	120
Primary quality	kg	3.7
Primary length	mm	228
Secondary mass (per meter)	kg	6.1
Magnetic attraction	kN	2.8
Secondary model		LSSA-03G
Secondary optional length	mm	108、216、324、432

LS-04G02

IRON CORE LINEAR MOTOR

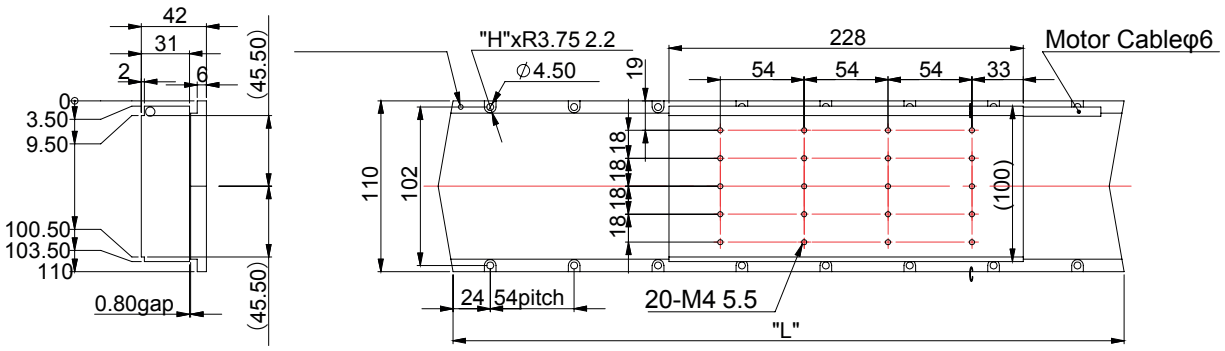

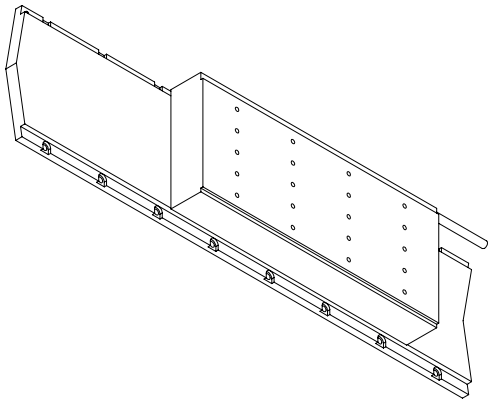

LSSA-04G		
Secondary model	L	**H**
LSSA-04G01	108	4
LSSA-04G02	216	8
LSSA-04G03	324	12
LSSA-04G04	432	16

LSP-04G02		
parameter	unit	LSP-04G02
Sustained thrust	N	471.2
Peak thrust	N	1240
Motor constant	N/vW	36.6
Continuous power	W	165.6
Polar pair distance	mm	36
Continuous current	Arms	3.8
peak current	Arms	10
force constant	N/Arms	124
Back EMF constant	Vs/m	71.6
Resistance @25℃	Ohms	8.4
inductance	mH	32.5
Electrical time constant	ms	3.9
Maximum coil temperature	℃	120
Primary quality	kg	4.7
Primary length	mm	228
Secondary mass (per meter)	kg	7.6
Magnetic attraction	kN	3.8
Secondary model		LSSA-04G
Secondary optional length	mm	108、216、324、432

LS-01G03

IRON CORE LINEAR MOTOR

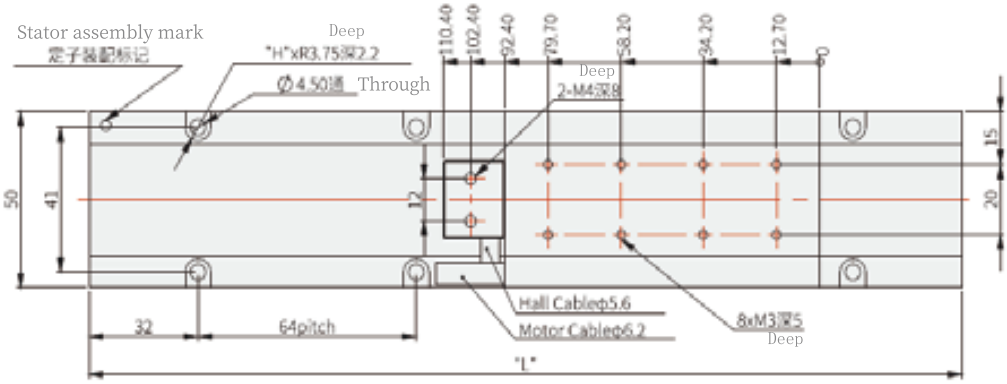

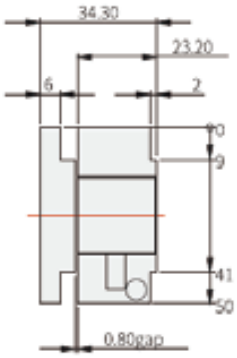

LSSA-01G		
Secondary model	L	H
LSSA-01G03-128	128	4
LSSA-01G03-192	192	6
LSSA-01G03-256	256	8
LSSA-01G03-320	320	10
LSSA-01G03-384	384	12
LSSA-01G03-448	448	14
LSSA-01G03-512	512	16

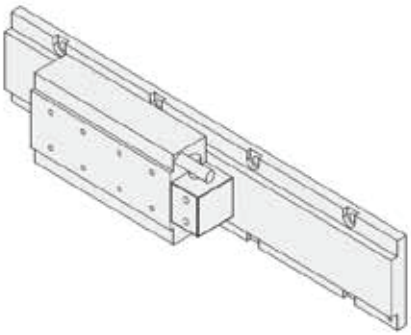

LSP-01G01		
parameter	unit	LSP-01G03
Sustained thrust	N	61.6
Peak thrust	N	203.3
Motor constant	N / vW	13.3
Continuous power	W	32.5
Polar pair distance	mm	32
Continuous current	Arms	4.4
peak current	Arms	17
force constant	N/Arms	14
Back EMF constant	Vs/m	11.4
Resistance @25℃	Ohms	0.9
inductance	mH	3.3
Electrical time constant	ms	3.7
Maximum coil temperature	℃	120
Primary quality	kg	0.7
Primary length	mm	92.4
Secondary mass (per meter)	kg	3.3
Magnetic attraction	kN	3.3
Secondary model		LSSA-01G03***
Secondary optional length	mm	128、192、256、320、384、448、512

LS-02G03

IRON CORE LINEAR MOTOR

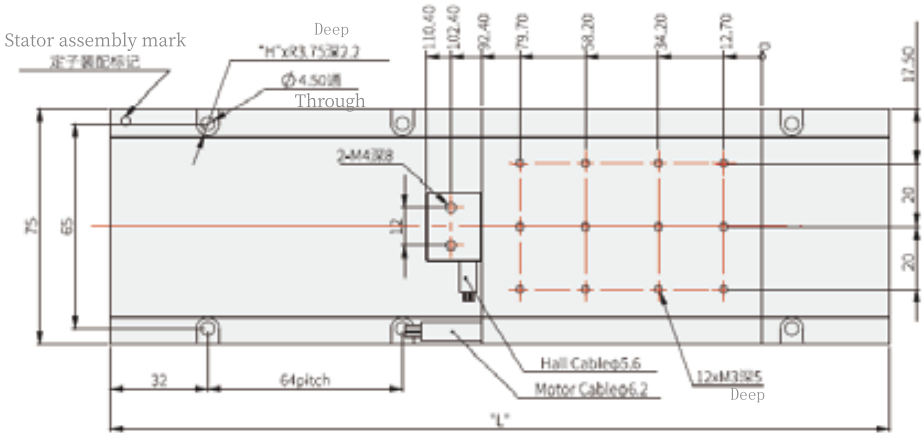

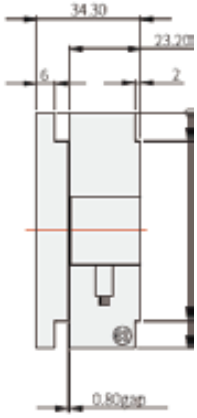

LSSA-02G		
Secondary model	L	H
LSSA-02G03-128	128	4
LSSA-02G03-192	192	6
LSSA-02G03-256	256	8
LSSA-02G03-320	320	10
LSSA-02G03-384	384	12
LSSA-02G03-448	448	14
LSSA-02G03-512	512	16

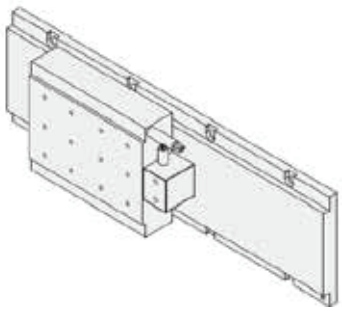

LSP-02G03		
parameter	unit	LSP-02G03
Sustained thrust	N	112.2
Peak thrust	N	370.3
Motor constant	N / vW	18.6
Continuous power	W	39.6
Polar pair distance	mm	32
Continuous current	Arms	4.4
peak current	Arms	17
force constant	N/Arms	25.5
Back EMF constant	Vs/m	20.8
Resistance @25℃	Ohms	1.5
inductance	mH	5.6
Electrical time constant	ms	3.7
Maximum coil temperature	℃	120
Primary quality	kg	0.7
Primary length	mm	92.4
Secondary mass (per meter)	kg	5
Magnetic attraction	kN	1.5
Secondary model		LSSA-02G03***
Secondary optional length	mm	128、192、256、320、384、448、512

LS-03G03

IRON CORE LINEAR MOTOR

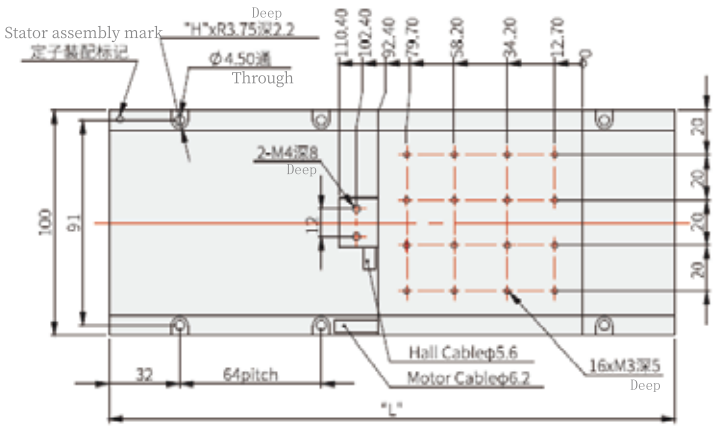

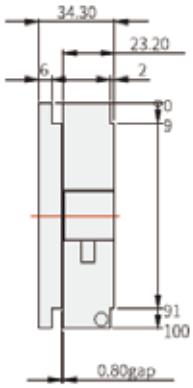

LSSA-02G		
Secondary model	L	H
LSSA-03G03-128	128	4
LSSA-03G03-192	192	6
LSSA-03G03-256	256	8
LSSA-03G03-320	320	10
LSSA-03G03-384	384	12
LSSA-03G03-448	448	14
LSSA-03G03-512	512	16

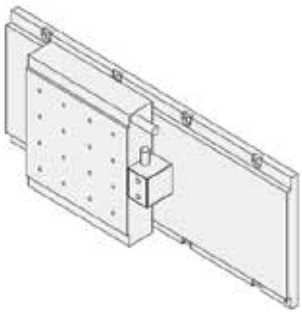

LSP-03G03		
parameter	unit	LSP-03G03
Sustained thrust	N	162.8
Peak thrust	N	537.2
Motor constant	N/vW	21.2
Continuous power	W	47.6
Polar pair distance	mm	32
Continuous current	Arms	4.4
peak current	Arms	17
force constant	N/Arms	37
Back EMF constant	Vs/m	30.2
Resistance @25℃	Ohms	1.8
inductance	mH	7.2
Electrical time constant	ms	4
Maximum coil temperature	℃	120
Primary quality	kg	1.2
Primary length	mm	92.4
Secondary mass (per meter)	kg	7
Magnetic attraction	kN	2.3
Secondary model		LSSA-03G03***
Secondary optional length	mm	128、192、256、320、384、448、512

LS-04G03

IRON CORE LINEAR MOTOR

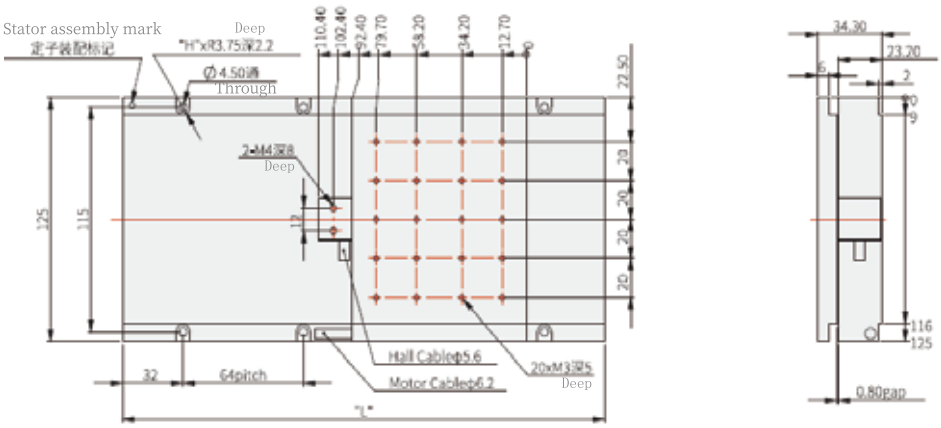

LSSA-02G		
Secondary model	L	H
LSSA-04G03-128	128	4
LSSA-04G03-192	192	6
LSSA-04G03-256	256	8
LSSA-04G03-320	320	10
LSSA-04G03-384	384	12
LSSA-04G03-448	448	14
LSSA-04G03-512	512	16

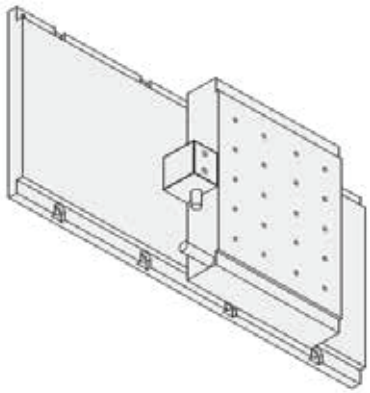

LSP-04G03		
parameter	unit	LSP-04G03
Sustained thrust	N	213.8
Peak thrust	N	705.7
Motor constant	N/vW	23.7
Continuous power	W	76.6
Polar pair distance	mm	32
Continuous current	Arms	4.4
peak current	Arms	17
force constant	N/Arms	48.6
Back EMF constant	Vs/m	39.7
Resistance @25℃	Ohms	2.9
inductance	mH	10.8
Electrical time constant	ms	3.7
Maximum coil temperature	℃	120
Primary quality	kg	1.5
Primary length	mm	92.4
Secondary mass (per meter)	kg	8.9
Magnetic attraction	kN	2.9
Secondary model		LSSA-04G03***
Secondary optional length	mm	128、192、256、320、384、448、512

LS-01G04

IRON CORE LINEAR MOTOR

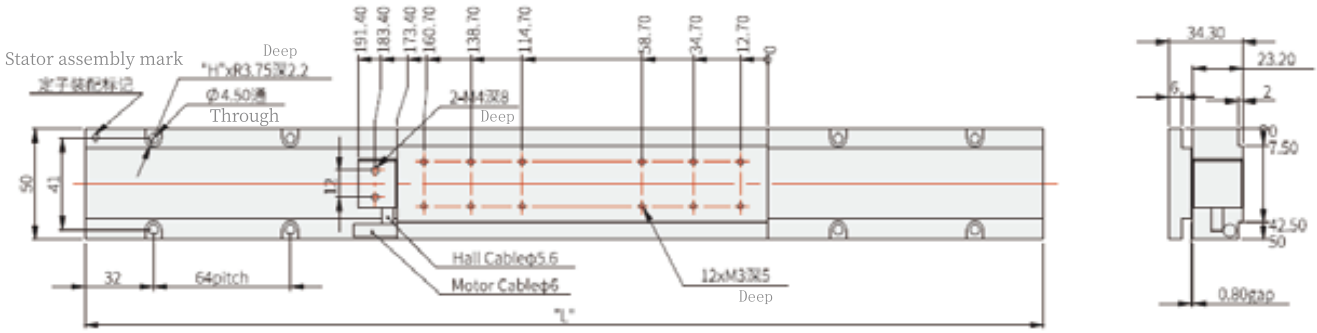

LSSA-01G		
Secondary model	L	H
LSSA-01G04-128	128	4
LSSA-01G04-192	192	6
LSSA-01G04-256	256	8
LSSA-01G04-320	320	10
LSSA-01G04-384	384	12
LSSA-01G04-448	448	14
LSSA-01G04-512	512	16

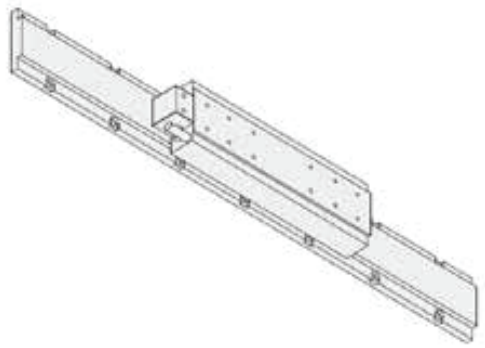

LSP-01G04		
parameter	unit	LSP-01G04
Sustained thrust	N	122.3
Peak thrust	N	403.7
Motor constant	N/vW	18.9
Continuous power	W	47.6
Polar pair distance	mm	32
Continuous current	Arms	4.4
peak current	Arms	17
force constant	N/Arms	27.8
Back EMF constant	Vs/m	22.7
Resistance @25℃	Ohms	1.8
inductance	mH	6.6
Electrical time constant	ms	3.7
Maximum coil temperature	℃	120
Primary quality	kg	1.3
Primary length	mm	173.4
Secondary mass (per meter)	kg	3
Magnetic attraction	kN	1.7
Secondary model		LSSA-01G04***
Secondary optional length	mm	128、192、256、320、384、448、512

LS-02G04

IRON CORE LINEAR MOTOR

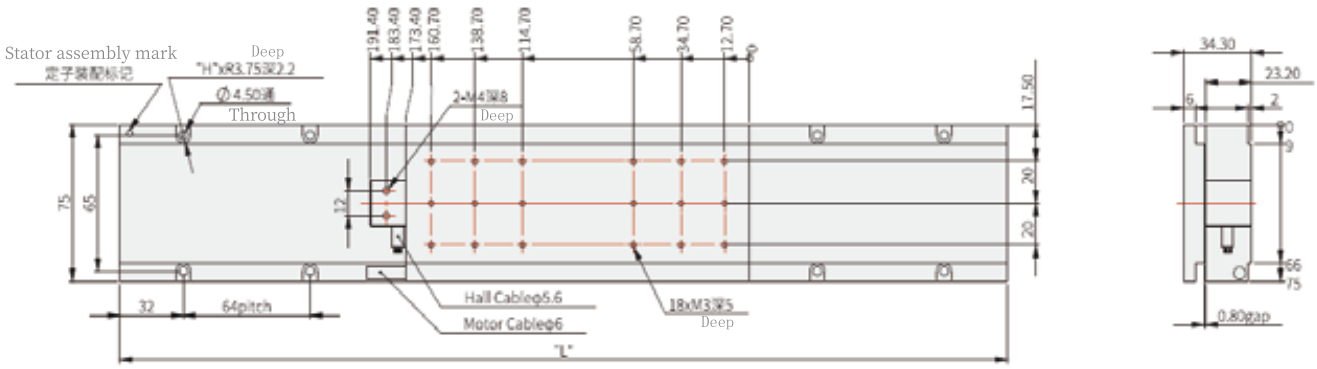

LSSA-02G		
Secondary model	L	H
LSSA-02G04-128	128	4
LSSA-02G04-192	192	6
LSSA-02G04-256	256	8
LSSA-02G04-320	320	10
LSSA-02G04-384	384	12
LSSA-02G04-448	448	14
LSSA-02G04-512	512	16

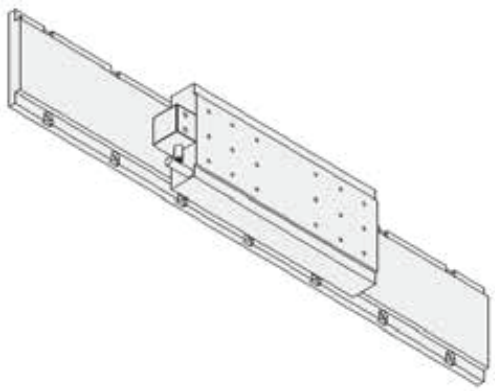

LSP-02G04		
parameter	unit	LSP-02G04
Sustained thrust	N	224.4
Peak thrust	N	740.5
Motor constant	N / vW	25.2
Continuous power	W	79.3
Polar pair distance	mm	32
Continuous current	Arms	4.4
peak current	Arms	17
force constant	N/Arms	51
Back EMF constant	Vs/m	41.7
Resistance @25℃	Ohms	3
inductance	mH	11.2
Electrical time constant	ms	3.7
Maximum coil temperature	℃	120
Primary quality	kg	1.7
Primary length	mm	173.4
Secondary mass (per meter)	kg	5
Magnetic attraction	kN	2.9
Secondary model		LSSA-02G04***
Secondary optional length	mm	128、192、256、320、384、448、512

LS-03G04

IRON CORE LINEAR MOTOR

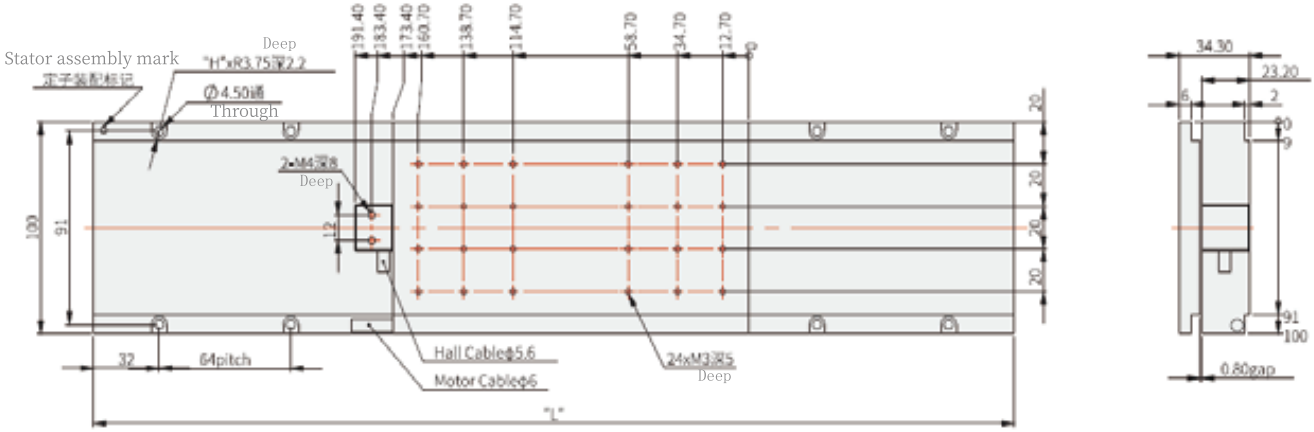

LSSA-03G		
Secondary model	L	H
LSSA-03G04-128	128	4
LSSA-03G04-192	192	6
LSSA-03G04-256	256	8
LSSA-03G04-320	320	10
LSSA-03G04-384	384	12
LSSA-03G04-448	448	14
LSSA-03G04-512	512	16

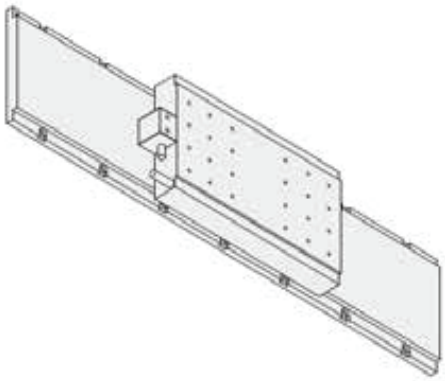

LSP-03G04		
parameter	unit	LSP-03G04
Sustained thrust	N	325.6
Peak thrust	N	1074.5
Motor constant	N / vW	30
Continuous power	W	95.1
Polar pair distance	mm	32
Continuous current	Arms	4.4
peak current	Arms	17
force constant	N/Arms	74
Back EMF constant	Vs/m	60.5
Resistance @25℃	Ohms	3.6
inductance	mH	14.4
Electrical time constant	ms	4
Maximum coil temperature	℃	120
Primary quality	kg	2.3
Primary length	mm	173.4
Secondary mass (per meter)	kg	7
Magnetic attraction	kN	4.5
Secondary model		LSSA-03G04***
Secondary optional length	mm	128、192、256、320、384、448、512

LS-04G04

IRON CORE LINEAR MOTOR

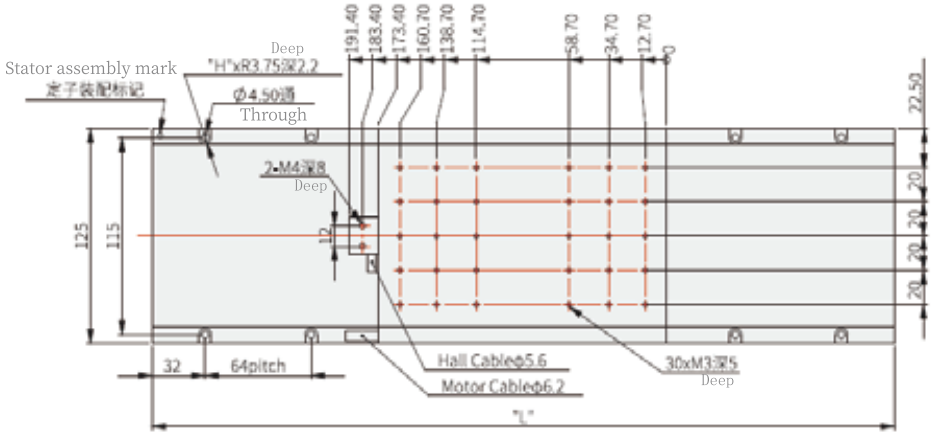

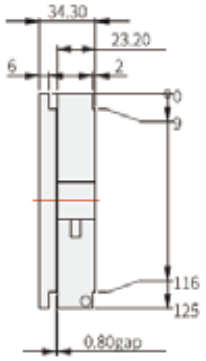

LSSA-04G		
Secondary model	L	H
LSSA-04G04-128	128	4
LSSA-04G04-192	192	6
LSSA-04G04-256	256	8
LSSA-04G04-320	320	10
LSSA-04G04-384	384	12
LSSA-04G04-448	448	14
LSSA-04G04-512	512	16

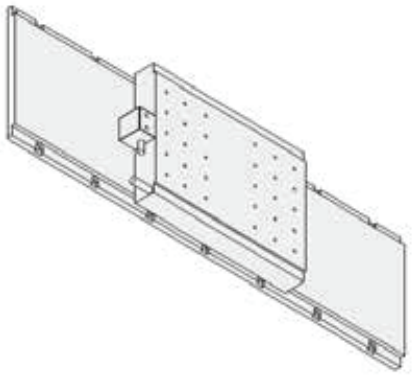

LSP-04G04		
parameter	unit	LSP-04G04
Sustained thrust	N	427.7
Peak thrust	N	1411.3
Motor constant	N/vW	34.1
Continuous power	W	153.3
Polar pair distance	mm	32
Continuous current	Arms	4.4
peak current	Arms	17
force constant	N/Arms	97.2
Back EMF constant	Vs/m	79.4
Resistance @25℃	Ohms	5.8
inductance	mH	21.5
Electrical time constant	ms	3.7
Maximum coil temperature	℃	120
Primary quality	kg	2.9
Primary length	mm	173.4
Secondary mass (per meter)	kg	8.9
Magnetic attraction	kN	5.8
Secondary model		LSSA-04G04***
Secondary optional length	mm	128、192、256、320、384、448、512

LS-02G05

IRON CORE LINEAR MOTOR

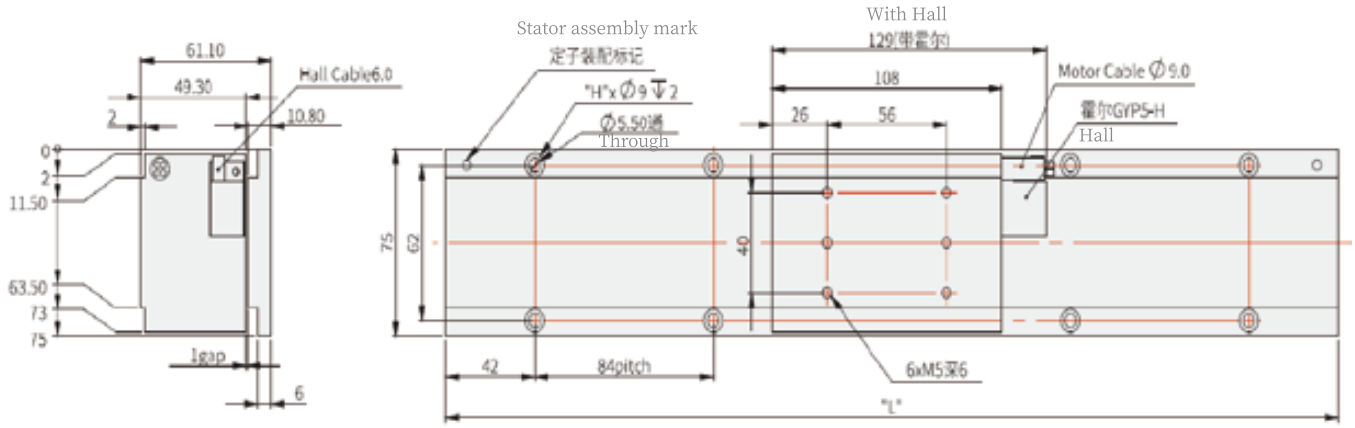

LSSA-02G		
Secondary model	L	H
LSSA-02G05-48	84	2
LSSA-02G05-168	168	4
LSSA-02G05-252	252	6
LSSA-02G05-336	336	8
LSSA-02G05-420	420	10

LSP-02G05		
parameter	unit	LSP-02G05
Sustained thrust	N	180
Peak thrust	N	402
Motor constant	N / vW	23.5
Continuous power	W	58.8
Polar pair distance	mm	42
Continuous current	Arms	4.7
peak current	Arms	14.4
force constant	N/Arms	38.3
Back EMF constant	Vs/m	31.3
Resistance @25℃	Ohms	1.3
inductance	mH	29.3
Electrical time constant	ms	22.5
Maximum coil temperature	℃	100
Primary quality	kg	2.2
Primary length	mm	108
Secondary mass (per meter)	kg	4.8
Magnetic attraction	kN	0.7
Secondary model		LSSA-02G05***
Secondary optional length	mm	84、168、252、336、420

LS-04G05

IRON CORE LINEAR MOTOR

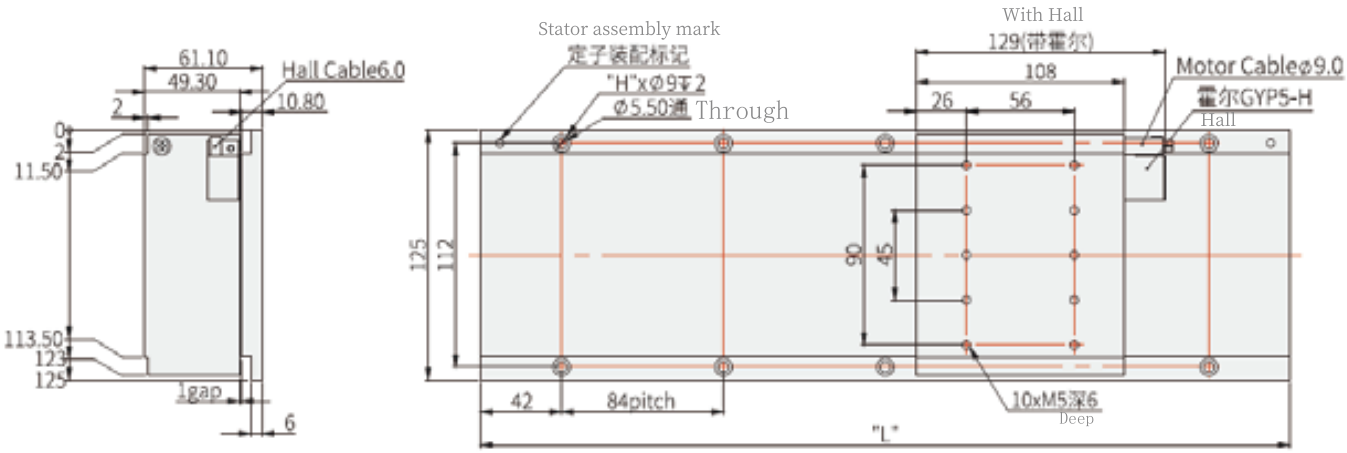

LSSA-04G		
Secondary model	L	H
LSSA-04G05-48	84	2
LSSA-04G05-168	168	4
LSSA-04G05-252	252	6
LSSA-04G05-336	336	8
LSSA-04G05-420	420	10

LSP-04G05		
parameter	unit	LSP-04G05
Sustained thrust	N	360
Peak thrust	N	800
Motor constant	N / vW	35.3
Continuous power	W	104
Polar pair distance	mm	42
Continuous current	Arms	4.7
peak current	Arms	14.4
force constant	N/Arms	76.5
Back EMF constant	Vs/m	62.5
Resistance @25℃	Ohms	2.3
inductance	mH	57.4
Electrical time constant	ms	25
Maximum coil temperature	℃	100
Primary quality	kg	4
Primary length	mm	108
Secondary mass (per meter)	kg	8.6
Magnetic attraction	kN	1.4
Secondary model		LSSA-04G05***
Secondary optional length	mm	84、168、252、336、420

LS-02G06

IRON CORE LINEAR MOTOR

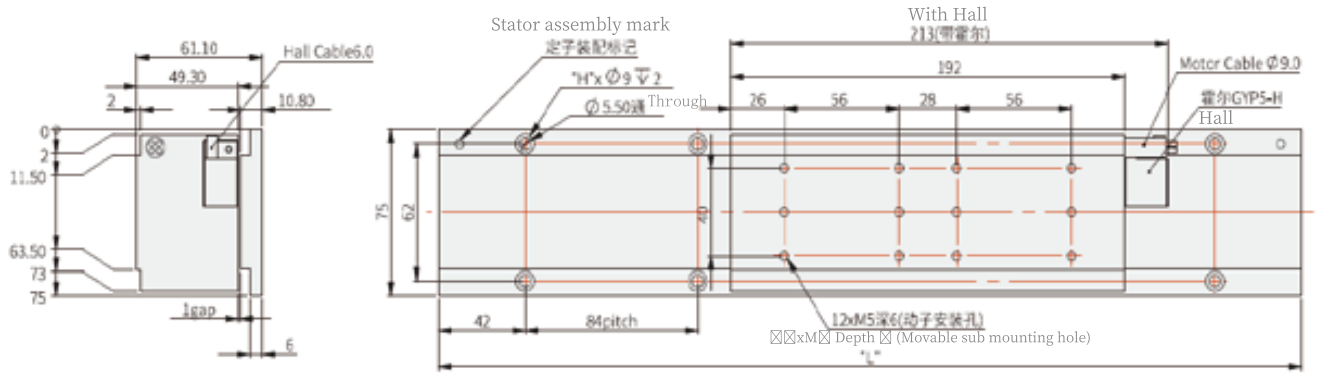

LSSA-02G		
Secondary model	L	H
LSSA-02G06-48	84	2
LSSA-02G06-168	168	4
LSSA-02G06-252	252	6
LSSA-02G06-336	336	8
LSSA-02G06-420	420	10

LSP-02G06		
parameter	unit	LSP-02G06
Sustained thrust	N	360
Peak thrust	N	802
Motor constant	N / vW	33.2
Continuous power	W	117.6
Polar pair distance	mm	42
Continuous current	Arms	4.7
peak current	Arms	14.4
force constant	N/Arms	76.6
Back EMF constant	Vs/m	62.6
Resistance @25℃	Ohms	2.6
inductance	mH	58.6
Electrical time constant	ms	22.5
Maximum coil temperature	℃	120
Primary quality	kg	4.1
Primary length	mm	192
Secondary mass (per meter)	kg	4.8
Magnetic attraction	kN	1.3
Secondary model		LSSA-02G06***
Secondary optional length	mm	84、168、252、336、420

LS-04G06

IRON CORE LINEAR MOTOR

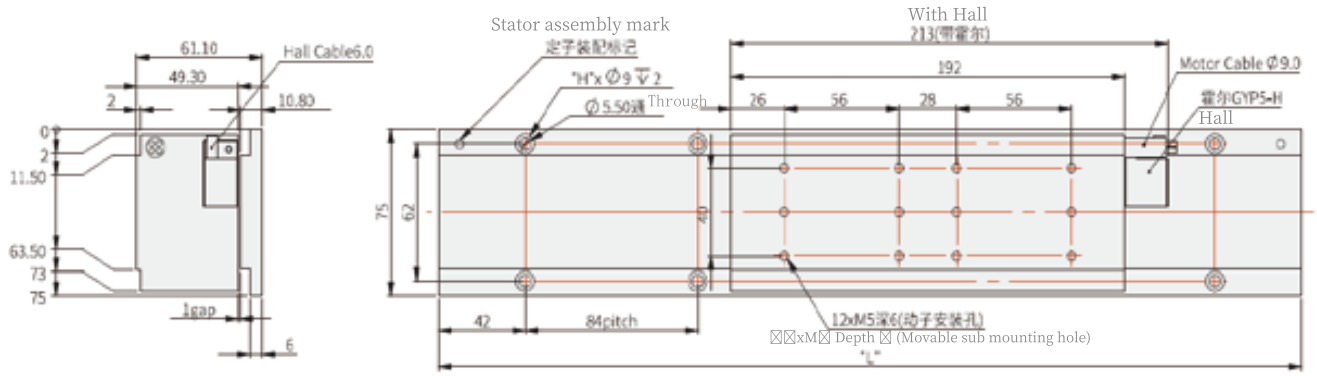

LSSA-04G		
Secondary model	L	H
LSSA-04G06-48	84	2
LSSA-04G06-168	168	4
LSSA-04G06-252	252	6
LSSA-04G06-336	336	8
LSSA-04G06-420	420	10

LSP-04G06		
parameter	unit	LSP-04G06
Sustained thrust	N	719
Peak thrust	N	1610
Motor constant	N/vW	51
Continuous power	W	199
Polar pair distance	mm	42
Continuous current	Arms	4.7
peak current	Arms	14.4
force constant	N/Arms	153
Back EMF constant	Vs/m	125.1
Resistance @25℃	Ohms	4.4
inductance	mH	110.8
Electrical time constant	ms	25.2
Maximum coil temperature	℃	120
Primary quality	kg	7
Primary length	mm	192
Secondary mass (per meter)	kg	8.6
Magnetic attraction	kN	2.7
Secondary model		LSSA-04G06***
Secondary optional length	mm	84、168、252、336、420