ISO-ER CHUCK

FEATURES

High precision: Shank run-out accuracy: ≤2μ m.
Combined run-out accuracy: ≤5μm. Dynamic balancing grade: ≤G1.
Advanced process of surface wearing resistance and corrosion resistance.
Keyway-free structure is suitable for the high- speed application.
It is suitable for engraving, milling and woodworking machining.
The taper angle of ER chuck for ISO shank is 8°.
Advantage of ISO shank with ER chuck: High repeatability precision (≤5μm), long service life and clamping range of Φ 1.0-20mm H7- precision cutter.

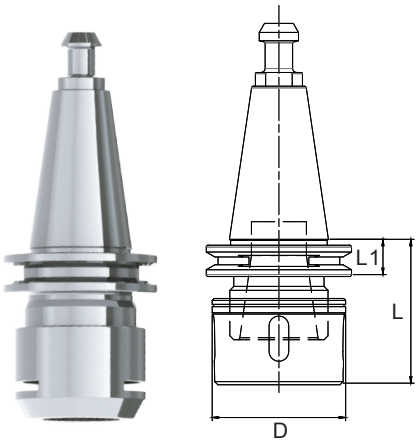

APPLICATION TYPE

Drilling Reaming Tapping Milling and cutting

ISO20-15-ER11-035

ISO- 20- 15- ER11- 035

Schematic Diagram for Naming

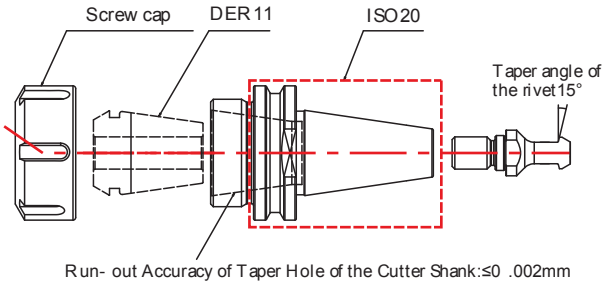

ISO- 20- 15- ER11- 035

Schematic Diagram for Cutter Installation Precision

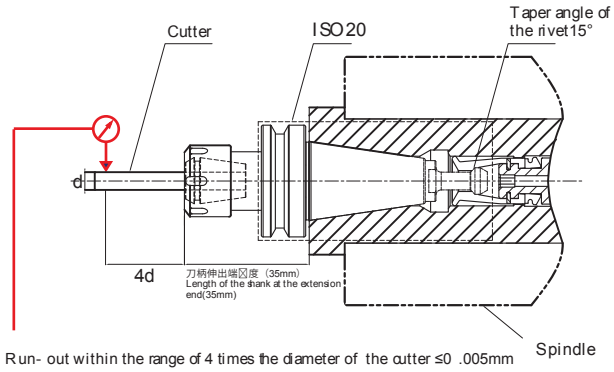

NAMING RULE:

ISO20-15-ER11-035

ISO
ISO CHUCK CODE

SHANK TYPE/mm
10 | 20 | 25 | 30 | 40 | 45 | 50 |

TAPER ANGLE OF THE SHANK RIVET
15: 15° taper angle

Length of the shank at the extension end /mm (three-digit number)

APPLICATION TYPE
ER20: ER20 chuck
SK10: SK6 chuck
KR16: KR16 chuck

ISO-ER CHUCK

TECHNICAL PARAMETERS

Shank type	Order type	Dimensions			Screw cap	Applicable speed	Chuck type	Grade A/ordinary grade, Grade AA/precision grade		Grade P/ultra precision grade, Grade PP/instrument grade	
		L	L1	D1				Range of cutter diameter	Requirement for the precision of the cutter shank diameter	Range of cutter diameter	Requirement for the precision of the cutter shank diameter
ISO10	ISO10-ER11-022	24	6.5	19	ER11B	40000RPM	ER11	2.0-7.0	H7	1.0-7.0	H7
ISO20	ISO20-ER16-035	35	9.2	28	ER16B	40000RPM	ER16	2.0-10.0	H7	1.0-10.0	H7
	ISO20-ER16-040	40	9.2	22							
	ISO20-ER20-035	35	9.2	34	ER20B		ER20	2.0-13.0		2.0-13.0	
	ISO20-ER20-040	40	9.2	22							
ISO25	ISO25-ER16-035	35	9.5	28	ER16B	40000RPM	ER16	2.0-10.0	H7	1.0-10.0	H7
	ISO25-ER16-060	60	19.1	28							
	ISO25-ER20-035	35	9.5	28	ER20B		ER20	2.0-13.0		2.0-13.0	
	ISO25-ER20-060	60	19.1	34							
	ISO25-ER25-035	35	19.1	28	ER25B		ER25	2.0-16.0		2.0-16.0	
	ISO25-ER25-060	60	19.1	42							
ISO30	ISO30-ER32-045	45	19.1	50	ER32B	40000RPM	ER32	2.0-20.0	H7	2.0-20.0	H7
	ISO30-ER32-065	65	19.1	50							